ORIGINAL INSTRUCTIONS

S/N: 2269 AND ABOVE

PLEASE CONTACT GAGE BILT FOR ALL OTHER SERIAL NUMBERS.

GB743
INSTALLATION TOOL

GAGE BILT

MADE in USA

INNOVATIVETOOLING
On the leading edge of Aircraft Tooling
800-832-7009
sales@innovativetooling.com
innovativetooling.com

TABLE OF CONTENTS

Page

EU Conformity and Warranty 3

Description and Technical Specifications 4

Description of Functions 5

Warnings 6

Principle of Operation 7

How to set-up the GB743 8

How to use the GB743 9

Maintenance 10

Filling and Bleeding 11

Troubleshooting 12

Overhaul 13-15

Parts Lists 16

DEXRON® III Oil Safety Data (SDS) 17

Nose Assembly Selection Chart 18

Alternate Styles & Accessories 19-24

GAGE BILT

DECLARATION OF CONFORMITY

MANUFACTURER: Gage Bilt Inc. 44766 Centre Ct. Clinton Twp. Michigan U.S.A. +1(586-226-1500)

WE DECLARE THAT THE EQUIPMENT SPECIFIED HEREIN CONFORMS TO THE FOLLOWING DIRECTIVES AND STANDARDS

Machinery Directive 2006/42/EC

EN12100-1 & EN12100-2

EN792-1:2000+A1

EU REPRESENTATIVE: Edgar Hausmann GmbH Förster-Busch-Str. 10 D-34346 Hann. Münden Germany

EQUIPMENT DESCRIPTION: GB743 FASTENER INSTALLATION TOOL

This product specified above conforms to the above dIrectives and standards.

SIGNATURE: Brian Leigh

NAME: BRIAN LEIGH
PRODUCT MANAGER
CLINTON TWP., MI U.S.A.
MAY 2010
+1(586) 226-1500

WARRANTY

Seller warrants that all goods covered by this catalog will conform to applicable specifications and will replace or repair, EXW our plant, any goods providing defective from faulty workmanship, or material, for 1 year from date of shipment.

Said warranty to remain in effect if, and only if, such goods are used in accordance with all instructions as to maintenance, operation and use, set forth in manuals and instruction sheets furnished by seller.

Sellers obligation under this warranty shall be limited to the repair or rework of the goods supplied or replacement thereof, at Seller's option, and in no case is to exceed the invoice value of said goods. Under no circumstances will the seller be liable for incidental or consequential damages or for damages incurred by the buyer or subsequent user in repairing or replacing defective goods or if the goods covered by this warranty are reworked or subjected to any type of additional processing.

This warranty is void if Seller is not notified in writing of any rejections or defects within 1 year after the receipt of the material by the customer.

THIS WARRANTY IS MADE IN LIEU OF ALL OTHER WARRANTIES EXPRESSED OR IMPLIED, INCLUDING MERCHANTABILITY.

DESCRIPTION

⚠ **WARNING: Any other use is forbidden.**

The GB743 is a pneumatic-hydraulic tool designed specifically for the efficient installation of blind rivets. It weighs 6.25 lbs. (2.83 kg) and can be operated in any position. It has a .900" (22.86mm) fastener setting stroke and a rated pull load of 4000 lbs. (17.8 kN) with 90 psi (6.2 bar) air pressure at the air inlet.

The GB743 installation tool operates on 90 to 100 psi (6.2-6.9 bar) of air pressure, with 90 psi. (6.2 bar) providing the maximum efficiency. At 90 psi. (6.2 bar) of air pressure, the GB743 does not exceed 81.5 dB(A) and consumes .30 SCF/cycle (8.50 L/cycle).

The air inlet is provided with 1/4-18 female pipe thread to accept the users air hose fitting.

UNLESS ORDERED FASTENERSPECIFIC (I.E. GB743/8N), THE STANDARD GB743 IS FURNISHED WITH NOSE ASSEMBLY 8N-743-24 AND A SPARE NOSE TIP 10204 TO CONVERT TO A 6N-743-24. ALL OTHER NOSE TIPS MUST BE ORDERED SEPARATELY. WHEN ORDERING TOOL FASTENER SPECIFIC, PLEASE CONTACT GAGE BILT FOR MORE INFORMATION.

ENVIRONMENTAL USE

⚠ **WARNING: Do not operate in an explosive atmosphere.**

The GB743 can be operated between 0ºF - 118ºF (-17.8ºC / 47.8ºC)

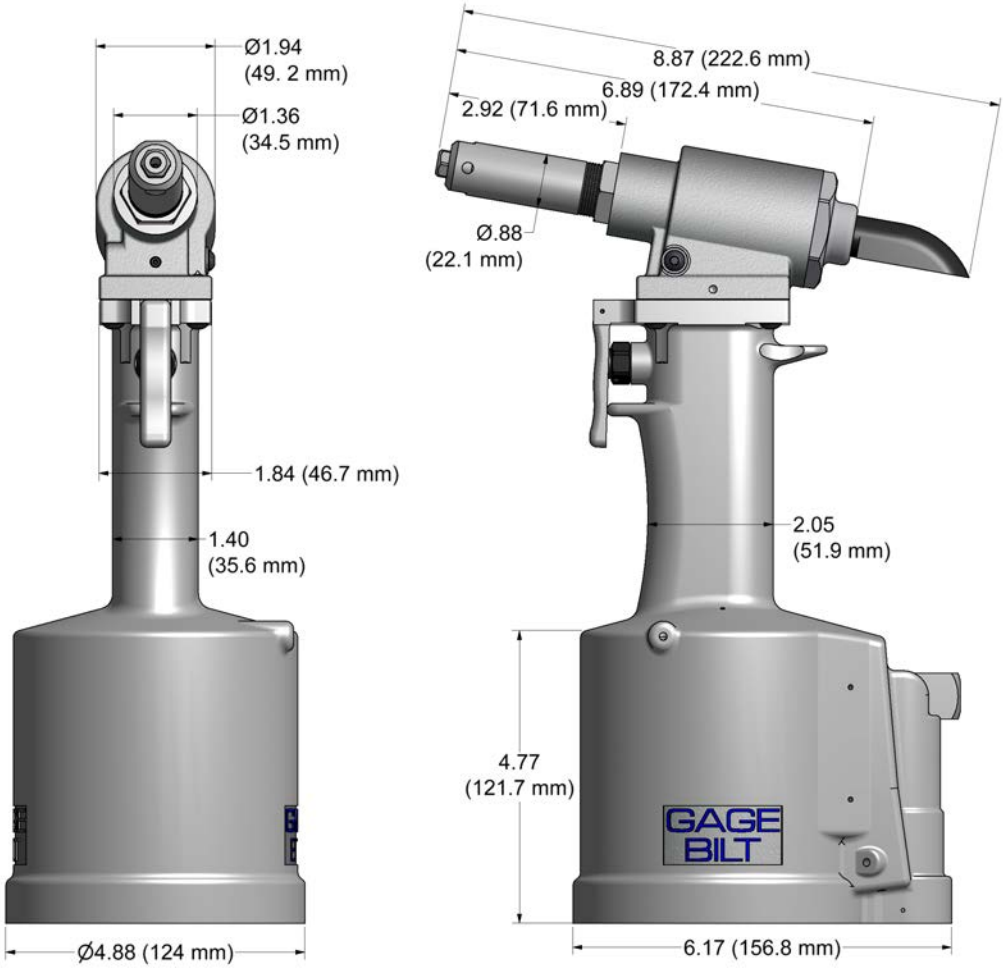

SPECIFICATIONS

Hand Held Weight	**- 6.25 lbs. (2.83 kg)**
Air pressure req'd	**- 90-100 p.s.i. (6.2-6.9 bar)**
Air consumption	**- .30 SCF/cycle (8.50 L/cycle)**
Hydraulic oil	**- Automatic Transmission Oil, Dexron® III, or equivalent.**
Setting stroke	**- .900" (22.86mm)**
Rated pull load	**- 4,000 lbs. (17.8 kN)**
Noise level	**- Less than 81.5 dB(A)**
Vibration	**- Tested-No hazards found.**

DESCRIPTION OF FUNCTIONS

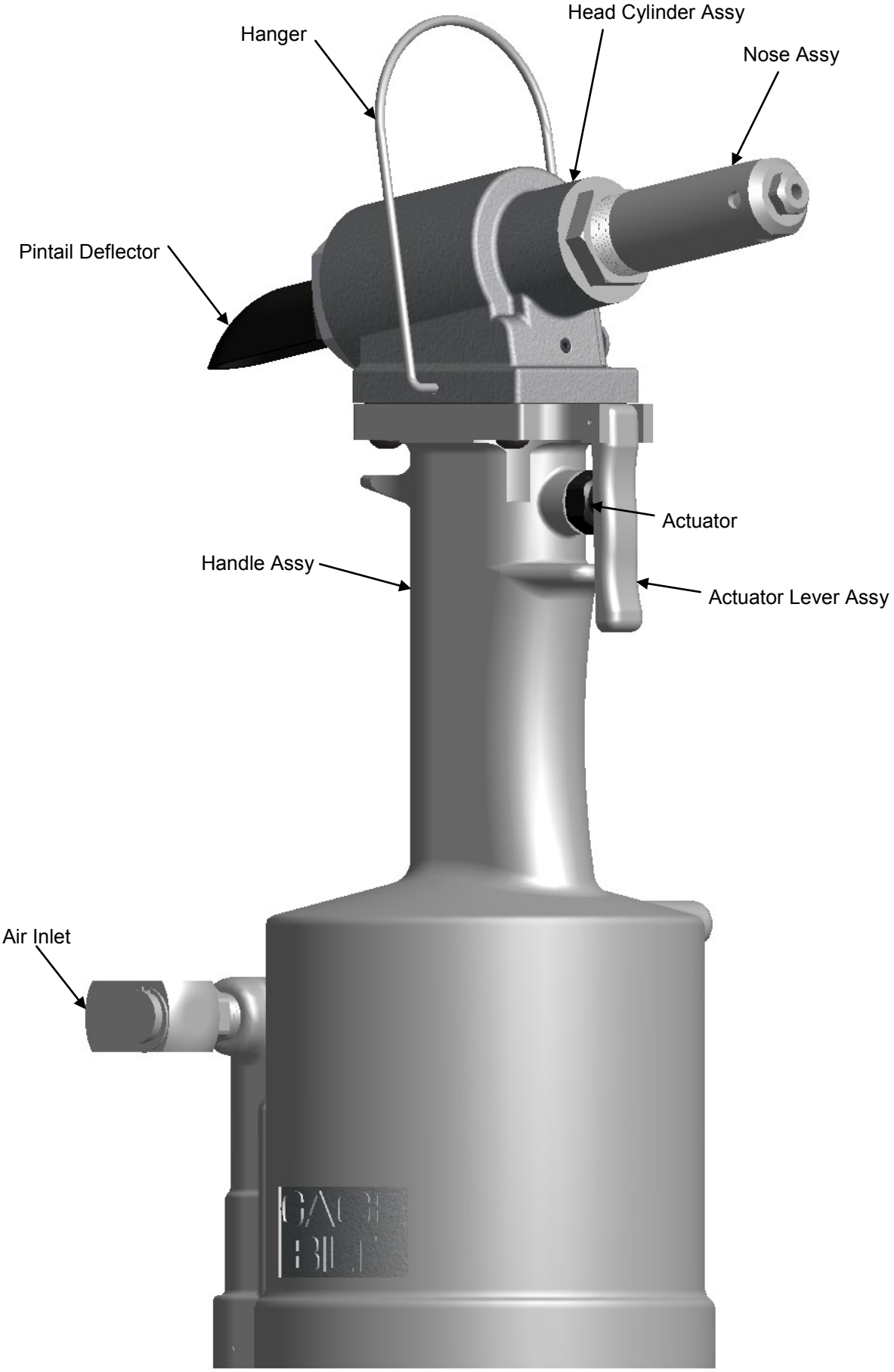

Image may not reflect actual tool.

SAFETY WARNINGS

TERMS AND SYMBOLS

- Product complies with requirements

- Hearing protection and eye protection

- Read manual prior to using equipment

- Wear safety boots

WARNINGS - Must be understood to avoid severe personal injury.

CAUTIONS - show conditions that will damage equipment and/or structure.

Notes - are reminders of required procedures.

GENERAL SAFETY RULES:

1. For multiple hazards, read and understand the safety instructions before installing, operating, repairing, maintaining, changing accessories on, or working near the assembly power tool for non-threaded mechanical fasteners.
2. Only qualified and trained operators should install, adjust or use the assembly power tool for non threaded mechanical fasteners.
3. Do not modify this assembly power tool for non-threaded mechanical fasteners. Modifications can reduce effectiveness of safety measures and increase the risks to the operator.
4. Do not discard safety instructions; give them to the operator.
5. Do not use assembly power tool for non-threaded mechanical fasteners if it has been damaged.
6. Tools shall be inspected periodically to verify all ratings and markings required are legible. The employer/user shall contact the manufacturer to obtain replacement marking labels when necessary.
7. Air under pressure can cause severe injury.
8. Always shut off air supply, drain hose of air pressure and disconnect tool from air supply when not in use, before changing accessories or when making repairs.
9. Never direct air at yourself or anyone else.
10. Whipping hoses can cause severe injury. Always check for damage or loose hoses and fittings.
11. Cold air shall be directed away from hands.
12. Whenever universal twist couplings (claw couplings) are used, lock pins shall be installed and whipcheck safety cables shall be used to safeguard against possible hose-to-tool or hose-to-hose connection failure.
13. Do not exceed the maximum air pressure stated on the tool or manual.
14. Never carry an air tool by the hose.

ADDITIONAL SAFETY RULES FOR PNEUDRAULIC POWER TOOLS:

1. Air under pressure can cause severe injury.
2. Always shut off air supply, drain hose of air pressure and disconnect tool from air supply when not in use, before changing accessories or when making repairs.
3. Never direct air at yourself or anyone else.
4. Whipping hoses can cause severe injury. Always check for damage or loose hoses and fittings.
5. Cold air shall be directed away from hands.
6. Whenever universal twist couplings (claw couplings) are used, lock pins shall be installed and whipcheck safety cables shall be used to safeguard against possible hose-to-tool or hose-to-hose connection failure.
7. Do not exceed the maximum air pressure stated on the tool or manual.
8. Never carry an air tool by the hose.

PROJECTILE HAZARDS:

1. Disconnect the tool from the energy source when changing inserted tools/nose assemblies or accessories.
2. Be aware that failure of the workpiece or accessories, or even the inserted tool/nose assembly itself can generate high-velocity projectiles.
3. Always wear impact resistant eye protection during operation of the tool. The grade of protection required should be assessed for each use.
4. The risk to others should also be assessed at this time.
5. Ensure that the workpiece is securely fixed.
6. Check that the means of protection from ejection of fastener and/or stem is in place and operative (such as the deflector).
7. Forcible ejection of the mandrel from the front of the nose assembly is possible.

OPERATING HAZARDS:

1. Use of tool can expose the operator's hands to hazards, including crushing, impacts, cuts, abrasions and heat. Wear suitable gloves to protect hands.
2. Operators and maintenance personnel shall be physically able to handle the bulk, weight and power of the tool.
3. Hold the tool correctly; be ready to counteract normal or sudden movements and have both hands available.
4. Maintain a balanced body position and secure footing.
5. Release the start-and-stop device in the case of interruption of energy supply.
6. Use only lubricants recommended by the manufacturer.
7. Avoid unsuitable postures as it is likely for these positions not to allow counteracting of normal or unexpected movement of the tool.
8. If the tool is fixed to a suspension device, make sure that fixation is secure.
9. Beware of the risk of crushing or pinching if nose equipment is not fitted.
10. Due to the tool weight, it is recommended safety shoes be worn during operation.
11. It is recommended tool be operated not more than 50 out of every 60 minutes, where prolonged use is expected.

REPETITIVE MOTIONS HAZARDS:

1. When using the tool, the operator can experience discomfort in the hands, arms, shoulders, neck or other parts of the body.
2. While using the tool, the operator should adopt a comfortable posture while maintaining a secure footing and avoiding awkward or off balanced postures. The operator should change posture during extended tasks; this can help avoid discomfort and fatigue.
3. If the operator experiences symptoms such as persistent or recurring discomfort, pain, throbbing, aching, tingling, numbness, burning sensations or stiffness, these warning signs should not be ignored. The operator should tell the employer and consult a qualified health professional.

ACCESSORY HAZARDS:

1. Disconnect tool from energy supply before changing the nose assembly or accessory.
2. Use only sizes and types of accessories recommended by the manufacturer. Do not use other types or sizes of accessories.

WORKPLACE HAZARDS:

1. Slips, trips and falls are major causes of workplace injury. Be aware of slippery surfaces caused by use of tool and also of trip hazards caused by the air line or hydraulic hose.
2. Proceed with care in unfamiliar surroundings. There could be hidden hazards, such as electricity or other utility lines.
3. The tool is not intended for use in potentially explosive atmospheres and is not insulated against contact with electrical power.
4. Ensure that there are no electrical cables, gas pipes, etc., which can cause a hazard if damaged by the tool.

NOISE HAZARDS:

1. Exposure to high noise levels can cause permanent, disabling hearing loss and other problems, such as tinnitus (ringing, buzzing, whistling or humming in the ears). Therefore, risk assessment and the implementation of appropriate controls for these hazards are essential.
2. Appropriate controls to reduce the risk may include actions such as damping materials to prevent workpieces from "ringing".
3. Use hearing protection in accordance with employer's instructions and as required by occupational health and safety regulations.
4. Operate and maintain the assembly power tool for non-threaded mechanical fasteners as recommended in the instruction handbook, to prevent an unnecessary increase in the noise level.
5. Select, maintain and replace the consumable/inserted tool as recommended in the instruction handbook, to prevent an unnecessary increase in noise.
6. If the power tool has a silencer, always ensure that it is in place and in good working order when the power tool is being operated.

VIBRATION HAZARDS:

1. Exposure to vibration can cause disabling damage to the nerves and blood supply of the hands and arms.
2. Wear warm clothing when working in cold conditions and keep your hands warm and dry.
3. If you experience numbness, tingling, pain or whitening of the skin in your fingers or hands, stop using the assembly power tool for non-threaded mechanical fasteners, tell your employer and consult a physician.
4. Support the weight of the tool in a stand, tensioner or balancer, because a lighter grip can then be used to support the tool.

PRINCIPLE OF OPERATION

When the air actuator assy is depressed, the pressurized air inside of the tool is released allowing spring pressure to move the valve spool assy causing the air to be redirected. The air is directed to the top of the air piston assy, moving it in a downward direction. The air below the air piston assy is then directed through the valve sleeve and exhausted out of the bottom of the tool. Simultaneously, the piston rod assy connected to the air piston assy is also moving down, forcing hydraulic oil up and into the front side of the head cylinder assy, causing the piston to move to the rear of the head cylinder assy. The internal components of the attached nose assembly are also moving with the piston to start the fastener installation. When the fastener installation is completed, the air actuator assy is released. Air pressure is then built up inside of the handle assy causing the valve spool assy to return to its original position and reversing the sequence directing air pressure to the rear of the head cylinder assy, causing the piston to move to the forward position.

PULL Cycle

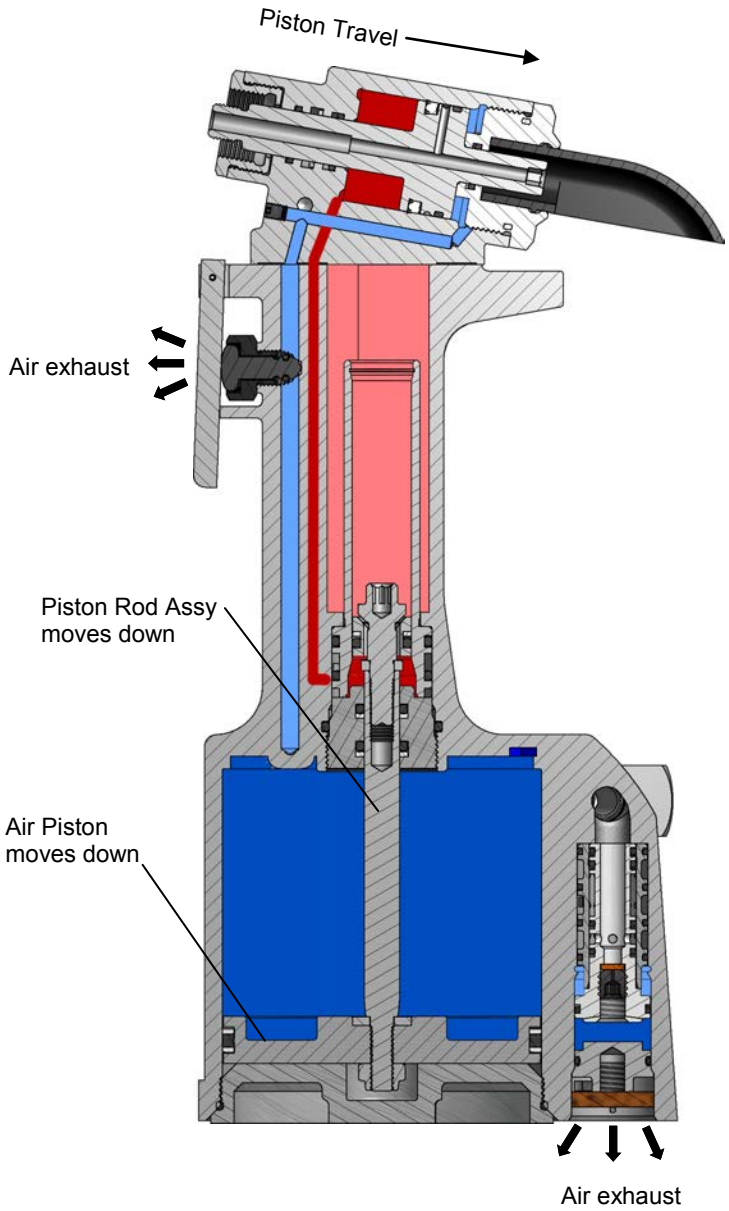

RETURN Cycle

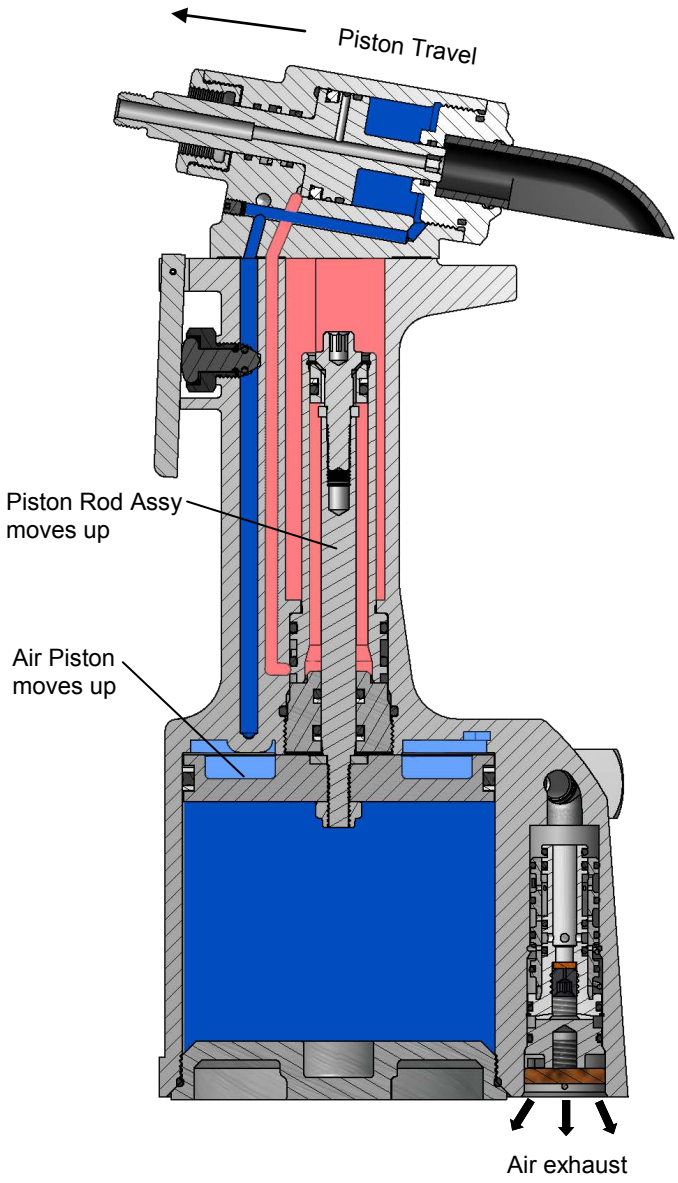

Pressurized Oil
Return Oil
Pressurized Air
Unpressurized Air

Image may not reflect actual tool.

HOW TO SET-UP THE GB743

WARNING: Only qualified and trained operators should install, adjust or use the assembly power tool for non-threaded mechanical fasteners.

WARNING: Operator **MUST** read and understand all warnings and cautions.

WARNING: It is required that eye protection, hearing protection and safety boots be worn at all times while handling this equipment.

WARNING: The users or the user's employer should assess specific risks that could be present as a result after each use based on their application.

- *Be sure there is adequate clearance for tool and operator's hands before proceeding. Keep fingers clear of any moving parts. Keep fingers clear from fasteners and installed materials. Severe personal injury may result.*
- *Verify the air lines and/or hydraulic hoses are not a trip hazard.*
- *Ensure that there are no electrical cables, gas pipes, etc., which can cause a hazard if damaged by the tool*

WARNING: Do not pull fastener in the air. Personal injury from fastener ejecting may occur.

WARNING: Air is exhausted from the bottom of the tool. Direct bottom of the tool (exhausted air) away from operator, other persons working in the vicinity, foreign matter and liquid.

WARNING: Do not carry from hoses or use as a hammer.

WARNING: Do not use in explosive atmosphere.

WARNING: Ensure air hose is securely connected to avoid possible hose whipping.

WARNING: Always disconnect air supply when tool is not in use to prevent accidental start-up.

WARNING: Be sure there is adequate clearance for tool and operator hands.

CAUTION: Do not use beyond the design intent.

The tool is shipped with a red plastic plug in the air inlet connector. The connector has a 1/4-18 female pipe thread to accept user air hose fitting. The tool comes with oil and is ready to use.

1. **Remove red plastic shipping plug from air inlet Swivel (A-249) and screw in your quick disconnect (air) fitting.**
2. **Attach Deflector (200232) to rear of head cylinder assy (743108). Rotate deflector (200232) away from operator or other people working in the vicinity.**
3. **Connect tool to air hose with 90 psi. (6.2 bar) using clean, dry air. 3/8 minimum diameter air line is recommended. Cycle tool five times by depressing and releasing actuator lever assy (704343).**
4. **Disconnect air hose from tool.**
5. **Select proper nose assembly (see nose assy selection chart on pg. 18 for more information). Screw collet onto piston and slide anvil over collet and secure with jam nut (70820). (See proper data sheet for further instructions.)**
6. **Connect air supply.**

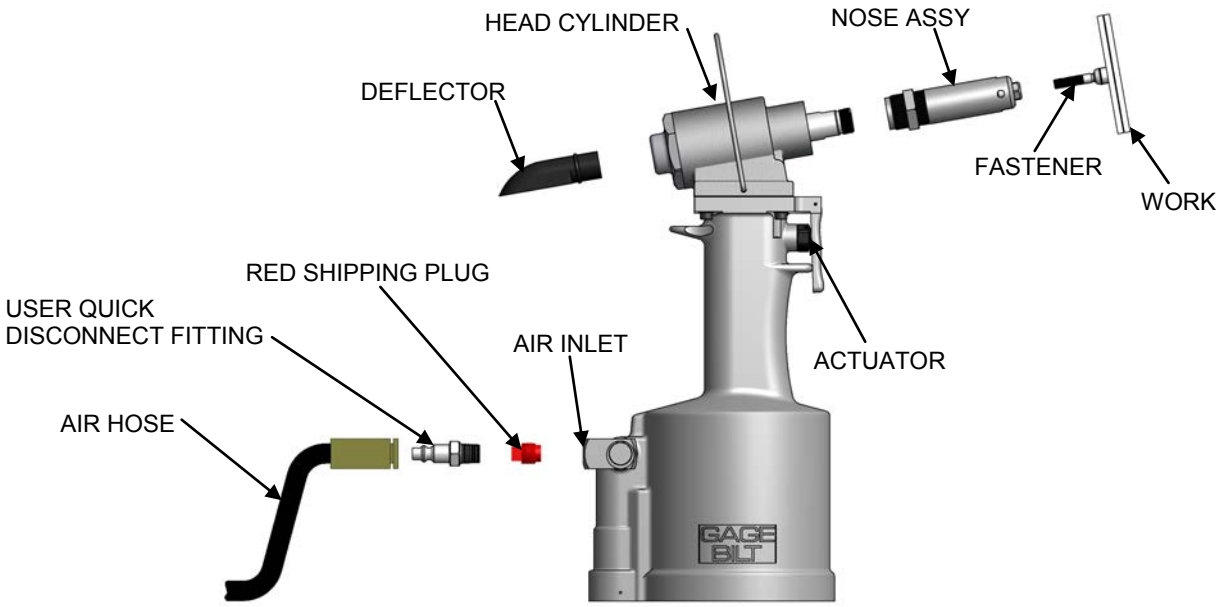

Image may not reflect actual tool

HOW TO USE THE GB743

⚠ **WARNING:** **Only qualified and trained operators should install, adjust or use the assembly power tool for non-threaded mechanical fasteners.**

⚠ **WARNING:** **Operator MUST read and understand all warnings and cautions.**

⚠ **WARNING:** **It is required that eye protection, hearing protection and safety boots be worn at all times while handling this equipment.**

⚠ **WARNING:** **The users or the user's employer should assess specific risks that could be present as a result after each use based on their application.**

- ***Be sure there is adequate clearance for tool and operator's hands before proceeding. Keep fingers clear of any moving parts. Keep fingers clear from fasteners and installed materials. Severe personal injury may result.***
- ***Verify the air lines and/or hydraulic hoses are not a trip hazard.***
- ***Ensure that there are no electrical cables, gas pipes, etc., which can cause a hazard if damaged by the tool***

⚠ **WARNING:** **Do not pull rivet in the air. Personal injury from fastener ejecting may occur.**

⚠ **WARNING:** **Air is exhausted from the bottom of the tool. Direct bottom of the tool (exhausted air) away from operator, other persons working in the vicinity, foreign matter and liquid.**

⚠ **WARNING:** **Do not carry from hoses or use as a hammer.**

⚠ **WARNING:** **Do not use in explosive atmosphere.**

⚠ **WARNING:** **Ensure air hose is securely connected to avoid possible hose whipping.**

⚠ **WARNING:** **Always disconnect air supply when tool is not in use to prevent accidental start-up.**

⚠ **WARNING:** **Be sure there is adequate clearance for tool and operator hands.**

⚠ **CAUTION:** **Do not use beyond the design intent.**

Blind Fasteners

1. **Insert fastener.**

2. **Insert fastener into nose assembly.**

3. **Press actuator to start cycle.**

4. **Release actuator as soon as fastener breaks.**

5. **Repeat steps 1-4.**

Images may not reflect actual tool or fastener

DAILY MAINTENANCE

⚠ **WARNING:** Tool must be maintained in a safe working condition at all times and examined on a daily basis for damage or wear. Any repair should be done by qualified personnel trained on Gage Bilt procedures.

⚠ **WARNING:** Excessive contact with hydraulic oil and lubricants should be avoided.

⚠ **WARNING:** Maintenance personnel **MUST** read and understand all warnings and cautions.

⚠ **WARNING:** Disconnect tool from its power source before performing maintenance, cleaning or when replacing worn or damaged components. Severe personal injury may occur if power source is not disconnected.

⚠ **WARNING:** Read SDS documents for all applicable materials.

Note:

- Dispose of hydraulic oil in accordance with manufacture safety datasheet.
- All tool materials are recyclable except rubber o'rings, seals and wipers.

The performance of any tool depends upon good maintenance practices. Following these minimal requirements daily will extend the life of your tool.

*Only use a clean dry air supply set at 90-100 p.s.i. (6.2-6.9 bar) Max. equipped with a filter-regulator to prevent wear.

* Check tool and nose assembly for damage. (Replace/Repair if necessary). See Overhaul (pgs. 13-15) for tool repair.

* Inspect hoses and couplings for wear, damage and leaks. (Replace/Repair if necessary).

* Verify that hydraulic hose fittings and couplings, air and electrical connections are secure. Tighten, Replace or Repair if necessary

* Cycle the tool several times to assure there are no leaks during use.

* Keep hydraulic system free of dirt.

* Proper care by operators is necessary in maintaining full productivity and reducing downtime.

* Keep nose assemblies, especially jaws, clean and free of chips and debris. Lube jaws and collet surfaces that jaws ride on with light machine oil on a daily basis.

* All Screwed End Caps, Base Covers, Air Fittings, Air Actuators, Screws and Nose Assemblies are to be examined at the end of each working shift to check that they are secure.

* For a complete overhaul, service tool kit (GB740TK) is recommended (see overhaul pgs. 13-15).

WEEKLY MAINTENANCE

- Keep the hydraulic system full (only use Dexron III or equivalent) and free of air by using the air bleeder assy (704153) (sold separately) on a weekly basis or as needed. (See Filling and Bleeding procedure pg. 11).

SEE TROUBLESHOOTING (PG. 12) AND OVERHAUL (PGS. 13-15) FOR FURTHER GUIDANCE.

CLEANING AND LUBRICATING PROCEDURE

Daily cleaning and lubrication of nose assembly will greatly reduce downtime and increase life of components. Using sewing machine oil, or an equivalent cleaner/lubricant, follow instructions below.

CLEANING

Clean nose assy daily or as often as needed.

1. Dip into mineral spirits or similar solvent to clean jaws and wash away metal chips and debris. DO NOT allow jaws to come in contact with other solvents. DO NOT let jaws soak. Dry jaws immediately.
2. Disassemble nose assy and use a sharp "pick" to remove embedded particles from grooves of jaws.

LUBRICATING

Lubricate nose assy after each cleaning and as often as needed.

1. Disconnect tool vacuum line (if equipped).
2. Point nose assembly into oil as shown.
3. Cycle tool 8-10 times and wipe dry.

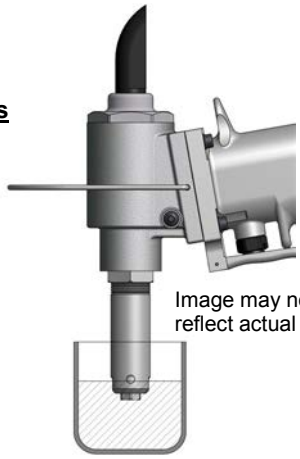

Image may not reflect actual tool

TORQUE SPECIFICATIONS

Button Head Cap Screws (402479) = 40 inch lbs.
Packing Plug (744118) = 45 foot lbs.
Flexlock Nut (400559) = 40 inch lbs.
End Cap (743214) = 45 foot lbs.
Button Head Cap Screws (402482) = 35-40 inch lbs. *(Do NOT over-tighten)*

FILLING AND BLEEDING PROCEDURE:

WARNING: Do not cycle tool without air bleeder assy (704153) (sold separately), or the screw and stat-o-seal, installed in tool head. Severe personal injury could result.

WARNING: Use CAUTION when removing screws, air bleeder assy (704153) and fill bottle (745263) (sold separately). Hydraulic oil may be under pressure.

CAUTION: Before filling handle assy (744129), air piston assy (744121) should be all the way down.

CAUTION: When forcing piston rod assy (744136) downward, with head cylinder assy (743108) removed, hydraulic oil will eject forcibly from handle assy (744129).

CAUTION: When bleeding tool, ensure tubing is free from kinks or other obstructions.

Note:

- Air Bleeder Assy (704153) is required.

FILLING & BLEEDING VIDEO AVAILABLE AT: http://www.gagebilt.com/rivet_tools_videos.php

BLEEDING PROCEDURE:

To replace a small amount of oil, DISCONNECT AIR FROM TOOL. Remove button head cap screw (402482) and stat-o-seal (S572) from head cylinder assy (743108). Install air bleeder assy (704153) (sold separately) and connect tool to air line. Cycle ten times to fully circulate oil through hydraulic system. DISCONNECT AIR FROM TOOL, remove the air bleeder assy (704153) (sold separately), and reinstall button head cap screw (402482) and stat-o-seal (S572) on head cylinder assy (743108). Torque 35-40 inch lbs. Do not over tighten. This will ensure the removal of any air from the hydraulic system and its replacement with oil.

FILLING AND BLEEDING PROCEDURE: *(required after tool has been dismantled)*

1. Place piston rod wrench assy (704149) in power cylinder (743131) and carefully push piston rod assy (744136) and air piston assy (744121) completely down.
2. Fill handle assy (744129), power cylinder (743131) and the oil passage on top of handle assy (744129) with automatic transmission oil, Dexron® III or equivalent. When looking at the top of the handle assy (744129), the oil passage is the hole that is counter bored for o'ring (S832). See image below.
3. Push piston (743407) full forward in head cylinder assy (743108), then attach head cylinder assy (743108) with care, ensuring gasket (704129) and o'ring (S832) are properly installed. Apply Loctite® 242 to button head cap screws (402479) and torque uniformly to 40 inch lbs. to prevent leakage around gasket (704129).
4. ENSURE TOOL IS DISCONNECTED FROM AIR. Remove button head cap screw (402482) and stat-o-seal (S572) from head cylinder assy (743108). Install air bleeder assy (704153) (sold separately) and connect tool to air line. Cycle ten times to fully circulate oil through hydraulic system.
5. DISCONNECT AIR FROM TOOL. Remove air bleeder assy (704153) (sold separately) and install button head cap screw (402482) and stat-o-seal (S572) on head cylinder assy (743108). Torque 35-40 inch lbs. Do not over tighten.
6. Reconnect air and cycle tool ten more times. Check tool stroke. We recommend using dial calipers. With the actuator assy-air (704130) released check dimension (A). Holding actuator assy-air (704130) in, check dimension (B). Subtract dimension (B) from dimension (A). If stroke doesn't check .900" (22.9 mm) min. (See figures below) follow bleeding procedure above.

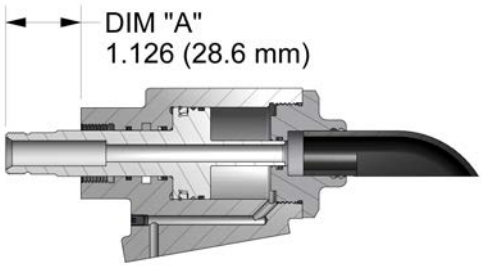

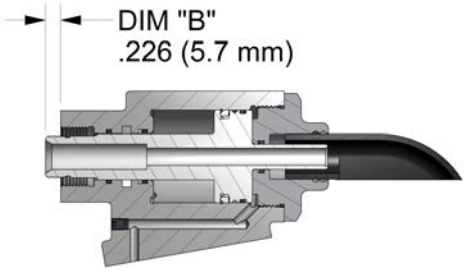

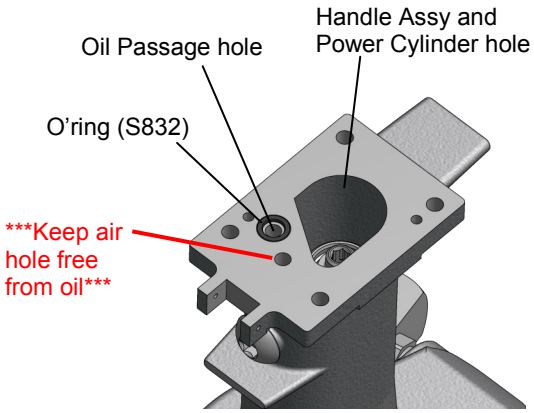

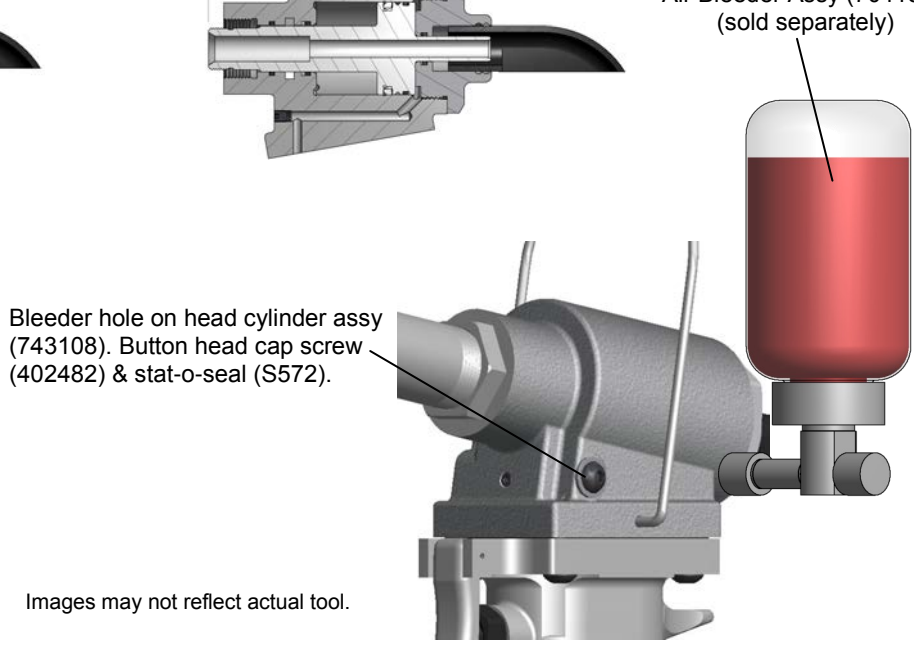

Images may not reflect actual tool.

TROUBLESHOOTING

Providing all maintenance conditions have been met, follow this systematic approach to diagnosis.

1. **MORE THAN ONE PULL IS REQUIRED TO BREAK FASTENER.**
   a) **Tool needs to be bled. (See filling and bleeding procedure pg. 11).**
   b) **Spring has fatigued, replace.**
   c) **Jaws are stripped or packed with chips. Clean or replace.**

2. **SLOW OR PARTIAL OPERATION WHEN THE ACTUATOR ASSY-AIR (704130) IS DEPRESSED.**
   a) **Polyseal (A-1135) and O'Rings (400792) on piston (743407) could be worn or damaged. Replace.**
   b) **Back-up ring (S908) and O'Ring (A-201) on piston rod assy (744136) could be worn or damaged. Replace.**
   c) **Muffler (744143) or filter inside valve spool assy (743142) may be plugged with dirt. Clean thoroughly and back-blow with compressed air.**
   d) **Hole in metering screw in valve spool assy (743142) may be blocked or damaged. Hole diameter should be .028" (.71 mm). Clear and size or replace.**

3. **NO OPERATION WHEN ACTUATOR ASSY-AIR (704130) IS DEPRESSED.**
   a) **Tool seized due to mechanical failure or damaged parts.**

4. **OIL LEAKAGE.**
   a) **DO NOT OPERATE WITH OIL LEAKING FROM TOOL. HIGH PRESSURE OIL MAY CAUSE SEVERE PERSONAL INJURY.**
   b) **Any oil leaking externally should be traced to its source. An o'ring or seal that leaks should be replaced.**

5. **AIR BYPASS FROM VALVE HOUSING.**
   a) **If the spring (744144) breaks or dislodges, air will flow freely through the muffler (744143). Replace or reset. Valve spring installation tool (744251) is recommended.**
   b) **Check o'rings on valve sleeve (743144), valve spool assy (743142), and valve plug (744142). If worn or damaged, replace. Valve sleeve removal tool (744152) is recommended.**

6. **FASTENER STEM JAMMED IN NOSE ASSEMBLY.**
   a) **Nose assembly components require service. DISCONNECT AIR FROM TOOL, remove the nose from the tool and disassemble. Replace worn or broken parts. Clean the surface the jaws ride on.**
   b) **Stems lodged side by side in the follower. Disassemble, remove stems, and reassemble.**
   c) **Incorrect follower.**

OVERHAUL

WARNING: Only qualified and trained personnel should perform overhaul.

WARNING: Personnel must read and understand all warnings and cautions.

WARNING: Tool must be maintained in a safe working condition at all times and examined on a daily basis for damage or wear. Any repair should be done by qualified personnel trained on Gage Bilt procedures.

WARNING: Disconnect tool from its power source before performing overhaul. Severe personal injury may occur if power source is not disconnected.

WARNING: Excessive contact with hydraulic oil and lubricants should be avoided (See SDS documents for all applicable materials).

WARNING: When operating, repairing or overhauling tool, wear approved eye protection. Do not look in front of tool or rear of tool when installing fastener.

WARNING: Ensure air hose is securely connected to avoid possible hose whipping (Air Actuated Tools only).

WARNING: Depress actuator assy-air (704130) and disconnect from air, with the piston in the rear position, before overhaul. Severe personal injury may occur if air hose is not disconnected. USE CAUTION when forcing piston rod assy downward with head cylinder removed. Hydraulic oil will eject forcibly from handle assy.

Note:

- **Dispose of hydraulic oil in accordance with manufacture safety datasheet.**
- **All tool materials are recyclable except rubber o'rings, seals and wipers.**

Perform overhaul in a clean, well lit area using care not to scratch or nick any smooth surface that comes in contact with an o'ring. Use of Lubriplate® (Gage Bilt part no. 402723) or other lubricant is recommended during reassembly to prevent tearing or distorting of o'rings.

The disassembly and re-assembly procedure can be accomplished by utilizing the following instructions and parts lists on pgs. 13-16. Use extreme care during disassembly and re-assembly not to mar or nick any smooth surface that comes in contact with seals. Before installing seals, always apply a good lubricant, such as Lubriplate®, to the surfaces. It is recommended that service tool kit (GB740TK) be used to facilitate overhaul. A complete overhaul can be achieved by the use of Service Kit (743018) which contains a complete set of o'rings, back-up rings, screws, washers and gasket.

Clean parts in mineral spirits or other o'ring compatible solvent being sure to clean o'ring grooves. Inspect components for scoring, excessive wear or damage.

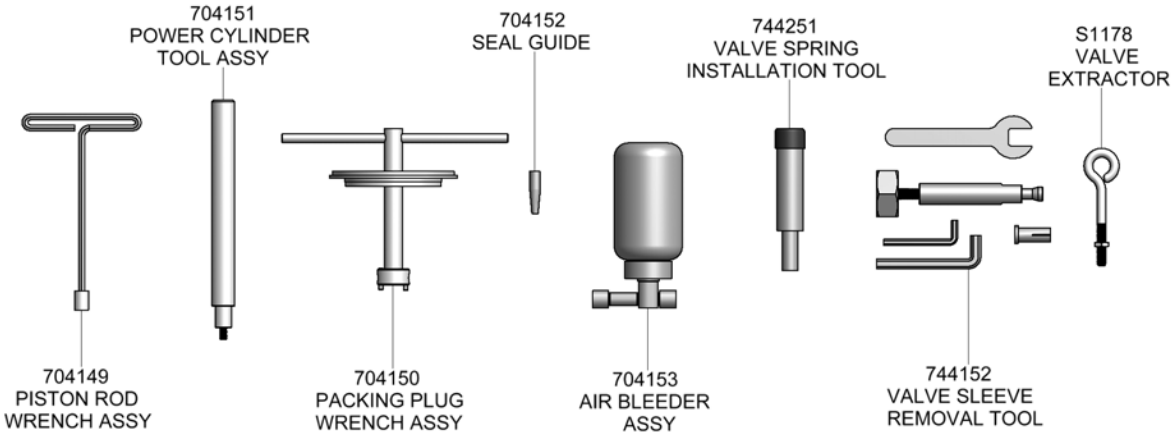

GB740TK Service Tool Kit Includes:

Part No.	Description
704149	Piston Rod Wrench Assy
704151	Power Cylinder Tool Assy
704150	Packing Plug Wrench Assy
704152	Seal Guide
704153	Air Bleeder Assy
744251	Valve Spring Installation Tool
744152	Valve Sleeve Removal Tool
S1178	Valve Extractor

TOOL DISPOSAL

1. **When tool life is met, drain hydraulic oil from tool and dispose of the hydraulic oil in accordance with SDS datasheet.**
2. **Disassemble tool and remove all rubber o'rings, seals, wipers and hydraulic hoses. All tool materials are recyclable except rubber o'rings, seals, wipers and hydraulic hoses. Dispose of rubber materials in accordance with all environmental regulations applicable in your area.**

ACTUATOR ASSY-AIR

⚠ **WARNING: Disconnect tool from its power source before actuator removal or installation. Severe personal injury may occur if power source is not disconnected.**

⚠ **CAUTION: Actuator assy-air (704130) can break if not careful.**

⚠ **CAUTION: Do not over tighten actuator assy-air (704130). Snug tighten only.**

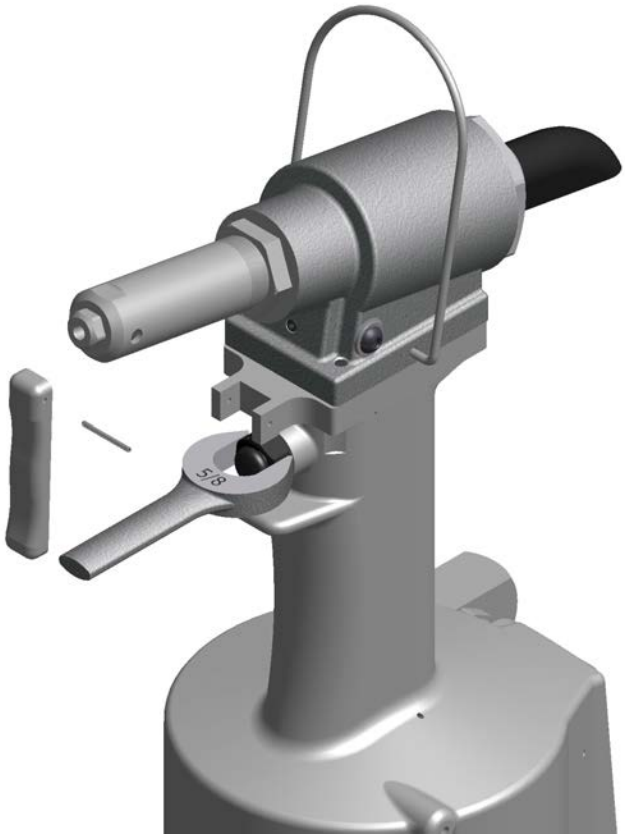

REMOVING ACTUATOR ASSY-AIR (704130)

1. **Remove actuator lever assy (704343) including pin-slotted (400608) from the handle assy (744129).**
2. **Insert a 5/8" open end box wrench around actuator assy-air (704130).**
3. **Loosen the actuator assy-air (704130).**
4. **Remove wrench. Unthread and remove the actuator assy-air (704130) with fingers from the handle assy (744129).**

INSTALLING ACTUATOR ASSY-AIR (704130)

1. **Apply Teflon® tape onto threads of actuator assy-air (704130) one to two wraps.**
2. **Thread the actuator assy-air (704130) all the way into handle assy (744129) with fingers.**
3. **Insert and turn 5/8" open end box wrench and snug tight approximately 1/4-1/2 turn.**
4. **Re-attach actuator lever assy (704343) including pin-slotted (400608) to the handle assy (744129).**

OVERHAUL

⚠ **WARNING: Disconnect tool from its air source before disassembly.**

HEAD

1. Remove nose assembly and adapter from tool before attempting disassembly of head cylinder assy (743108).
2. Remove end cap (743214).
3. Push against threaded end of piston (743407) to slide it out of head cylinder assy (743108). Be careful not to damage threads or cause burrs on polished piston rod surface.

The re-assembly sequence is the opposite of disassembly. (See Filling and Bleeding procedure pg. 11). Apply Loctite® #242 and torque the button head cap screws (402479) uniformly to 40 inch lbs. to prevent leakage around the gasket (704129).

HANDLE

To inspect air cylinder bore, remove base cover (744124). Any further disassembly will require removal of the head cylinder assy (743108) first.

For complete disassembly.

1. Remove base cover (744124).
2. Holding tool upright, remove four button-head cap screws (402479). Lift head cylinder assy (743108) from handle assy (744129) and set aside o'ring (S832) and gasket (704129).
3. Empty all hydraulic oil into an approved container and dispose of in accordance with all environmental regulations applicable to your area.
4. Place piston rod wrench assy (704149) down into top of power cylinder (743131) and into the hex of piston rod assy (744136). While holding the piston rod wrench assy (704149), remove flexlock nut (400559) using a 7/16" socket wrench. Still holding piston rod wrench assy (704149), remove air piston assy (744121) using packing plug wrench assy (704150), by turning counterclockwise.
5. When air piston assy (744121) is completely free from piston rod assy (744136), tap or push on the piston rod wrench assy (704149) to eject air piston assy (744121) from bottom of handle assy (744129).
6. After removal of air piston assy (744121), slide piston rod assy (744136) back up to the end of its travel. Using packing plug wrench assy (704150) remove packing plug (744118).
7. With packing plug (744118) removed, power cylinder (743131) can be removed by pushing on power cylinder tool assy (704151) when inserted into top of power cylinder (743131).

To reassemble the handle assy (744129).

1. Reverse the above procedure, being certain that all o'rings are properly lubricated before installation. Torque packing plug (744118) to 45 foot lbs.
2. Attach the seal guide (704152) to the piston rod assy (744136) and tap the piston rod assy (744136) through the packing plug (744118).
3. Attach air piston assy (744121) and flexlock nut (400559). Torque flexlock nut to 40 inch lbs.
4. Attach air piston assy (744121) to piston rod assy (744136).
5. With the piston rod in the down position, fill oil passage on top of handle assy (744129) with automatic transmission oil, Dexron® III or equivalent. When looking at top of handle assy (744129) the oil passage is the hole that has a counterbore for (S832) o'ring.
6. Replace gasket (704129) and o'ring (S832), just prior to replacing head cylinder assy (743108). Torque all screws to manual specifications. (See Filling & Bleeding procedure pg. 11) & (See torque specs. pg. 10).

AIR VALVE

1. Remove pin (744149) and muffler (744143).
2. Insert valve extractor (S1178) into end of valve plug (744142) and pull it out.
3. Using the same procedure, pull out valve spool assy (743142).
4. It should never be necessary to remove valve sleeve (743144) unless the ports in the valve sleeve (743144) are plugged from contaminated air. If ports are plugged, use needle nose pliers to grasp end of spring (744144), turning clockwise and pulling to dislodge from groove in casting. Valve spring installation tool (744251) will facilitate the proper installation of the spring (744144).
5. Valve sleeve (743144) can be pulled out using valve sleeve removal tool (744152).

INNOVATIVETOOLING
On the leading edge of Aircraft Tooling
800-832-7009
sales@innovativetooling.com
innovativetooling.com

GB743
PARTS LIST

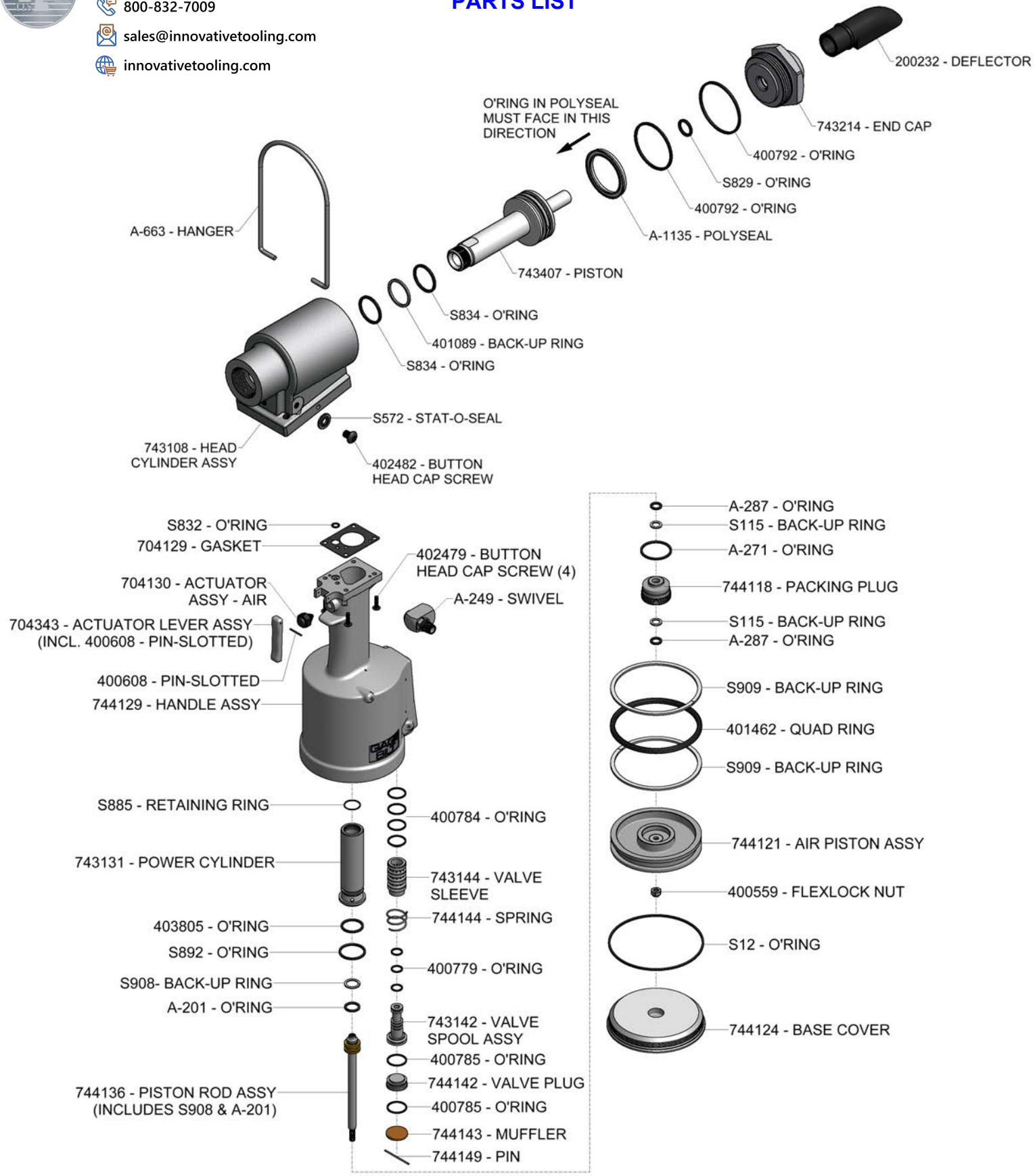

DEXRON® III OIL SAFETY DATA

FIRST AID MEASURES

Eye: No specific first aid measures are required. As a precaution, remove contact lenses, if worn, and flush eyes with water.
Skin: No specific first aid measures are required. As a precaution, remove clothing and shoes if contaminated. To remove the material from skin, use soap and water. Discard contaminated clothing and shoes or thoroughly clean before reuse.
Ingestion: No specific first aid measures are required. Do not induce vomiting. As a precaution, get medical advice.
Inhalation: No specific first aid measures are required. If exposed to excessive levels of material in the air, move the exposed person to fresh air. Get medical attention if coughing or respiratory discomfort occurs.
Note to Physicians: In an accident involving high-pressure equipment, this product may be injected under the skin. Such an accident may result in a small, sometimes bloodless, puncture wound. However, because of its driving force, material injected into a fingertip can be deposited into the palm of the hand. Within 24 hours, there is usually a great deal of swelling, discoloration, and intense throbbing pain. Immediate treatment at a surgical emergency center is recommended.

FIRE

Leaks/ruptures in high pressure system using materials of this type can create a fire hazard when in the vicinity of ignition sources (eg. open flame, pilot lights, sparks, or electric arcs).

FLAMMABLE PROPERTIES:
Flashpoint: (Cleveland Open Cup) 178 °C (352 °F) Minimum

EXTINGUISHING MEDIA: Use water fog, foam, dry chemical or carbon dioxide (CO_2) to extinguish flames.

PROTECTION OF FIRE FIGHTERS:
Fire Fighting Instructions: This material will burn although it is not easily ignited. See Section 7 for proper handling and storage. For fires involving this material, do not enter any enclosed or confined fire space without proper protective equipment, including self-contained breathing apparatus.
Combustion Products: Highly dependent on combustion conditions. A complex mixture of airborne solids, liquids, and gases including carbon monoxide, carbon dioxide, and unidentified organic compounds will be evolved when this material undergoes combustion.

ACCIDENTAL RELEASE MEASURES

Protective Measures: Eliminate all sources of ignition in vicinity of spilled material.
Spill Management: Stop the source of the release if you can do it without risk. Contain release to prevent further contamination of soil, surface water or groundwater. Clean up spill as soon as possible. Use appropriate techniques such as applying non-combustible absorbent materials or pumping. Where feasible and appropriate, remove contaminated soil. Place contaminated materials in disposable containers and dispose of in a manner consistent with applicable regulations.

ECOLOGICAL INFORMATION

Waste disposal: In accordance with all environmental regulations applicable to your area.

Spillage: Prevent entry into drains, sewers and water course. Soak up with diatomaceous earth or other inert material. Store in appropriate container for disposal.

Ecotoxocity: This material is expected to be harmful to aquatic organisms and may cause long-term adverse effects in the aquatic environment. The ecotoxicity hazard is based on an evaluation of data for the components or a similar material.

HANDLING

Precautionary Measures: DO NOT USE IN HIGH PRESSURE SYSTEMS in the vicinity of flames, sparks and hot surfaces. Use only in well ventilated areas. Keep container closed. Keep out of the reach of children.
General Handling Information: Avoid contaminating soil or releasing this material into sewage and drainage systems and bodies of water.
Static Hazard: Electrostatic charge may accumulate and create a hazardous condition when handling this material. To minimize this hazard, bonding and grounding may be necessary but may not, by themselves, be sufficient. Review all operations which have the potential of generating and accumulating an electrostatic charge and/or a flammable atmosphere (including tank and container filling, splash filling, tank cleaning, sampling, gauging, switch loading, filtering, mixing, agitation, and vacuum truck operations) and use appropriate mitigating procedures.

DISPOSAL CONSIDERATIONS

Use material for its intended purpose or recycle if possible. Oil collection services are available for used oil recycling or disposal. Place contaminated materials in containers and dispose of in a manner consistent with applicable regulations.

ACCESSORIES

XX-703-18

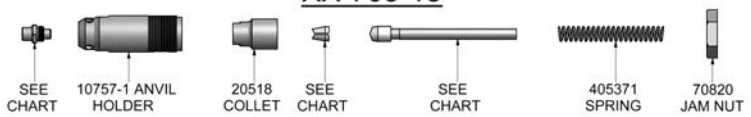

XX-734A-20

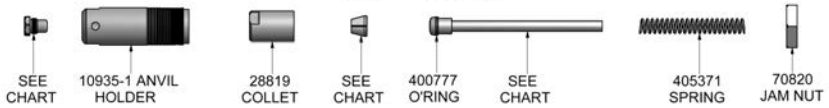

XX-743-24

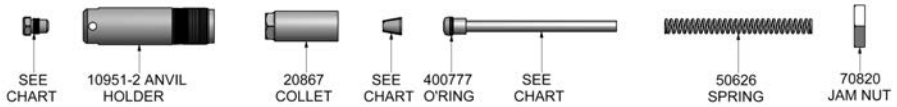

NOSE ASSEMBLY SELECTION CHART *(For Non-Vacuum Tools Only)*

(Sold Separately)

RIVET	DIA.	NOSE ASSEMBLY	NOSE TIP	JAW	FOLLOWER	DESIGNATION
AVEX® (1624 PROTRUDING HEAD)	3/16	AV6-743-24 [1]	10248-7	30824	48808	AV6
AVEX® (1624 COUNTERSUNKHEAD)	3/16	6C-743-24 [1]	10248-8	30824	48808	6C
BULB-TITE® (STRUCTURAL) RIVET	3/16	BT06-743-24 [1]	12282-1	30824	48808	BT06
	1/4	BT08-743-24 [1]	10391	30824	48808	BT08
	9/32	BT09-743-24 [1]	10289	30824	40901	BT09
KLAMP-TITE® (STRUCTURAL) RIVET	3/16	6KT-743-24 [1]	10263	30824	48808	6KT
	1/4	8KT-743-24 [1]	10262	30824	48808	8KT
MAGNA-TITE® RIVET (**LOW PROFILE & SHAVEABLE HEAD**)	3/16	6MTL-743-24 [1]	12384	30824	48808	6MTL
	1/4	8MTL-743-24 [1]	12385	30824	48808	8MTL
MAGNA-TITE® RIVET **(PROTRUDING & OVAL HEAD)**	3/16	6MTP-743-24 [1]	12382	30824	48808	6MTP
	1/4	8MTP-743-24 [1]	12383	30824	48808	8MTP
MILLIMETER SEAL PLUG	4MM	5N-743-24 [1]	10203	30824	48808	5N
	5MM	6N-743-24 [1]	10204	30824	48808	6N
MONOBOLT® RIVET	3/16	MB06-734A-20 [2]	-	-	-	MB06
	1/4	MB08-734A-20 [2,4]	-	-	-	MB08
POP® OPEN END NAIL RIVET	3/32	3N-703-18 [2]	-	-	-	3N
	1/8	4N-703-18 [2]	-	-	-	4N
	5/32	5N-743-24 [1]	10203	30824	48808	5N
	3/16	6N-743-24 [1]	10204	30824	48808	6N
	1/4	8N-743-24 [1]	10211	30824	48808	8N
POP® CLOSED END NAIL RIVET (ALUMINUM MANDREL)	3/32	3N-703-18 [2]	-	-	-	3N
	1/8	4CEA-703-18 [2]	-	-	-	4CEA
	5/32	5CEA-743-24 [1]	13472	30824	48808	5CEA
	3/16	6CEA-743-24 [1]	13473	30824	48808	6CEA
POP® CLOSED END NAIL RIVET (STEEL MANDREL)	3/32	3N-703-18 [2]	-	-	-	3N
	1/8	4CES-703-18 [2]	-	-	-	4CES
	5/32	5CES-743-24 [1]	13476	30824	48808	5CES
	3/16	6CES-743-24 [1]	13477	30824	48808	6CES
	1/4	8CES-743-24 [1]	13469	30824	48808	8CES
PLASTIC SPLIT RIVET	3/32	3P-703-18 [2,3]	-	-	-	3P
	1/8	4P-703-18 [2,3]	-	-	-	4P
	5/32	5P-743-24 [1,3]	10203-2	30824	48808	5P
	3/16	6P-743-24 [1,3]	10167	30824	48808	6P
	1/4	8P-743-24 [1,3]	10166	30824	48808	8P
T RIVET®	3/16	6T-743-24 [1]	10209	30824	48808	6T
	1/4	8T-743-24 [1]	10286	30824	48808	8T
TLR® RIVET	1/4	8TLR-743-24 [1]	10246	30824	48808	8TLR
COUNTERSUNK HEAD MAGNA-LOK®, MAGNA-BULB® & HEMLOK® & SERRATED STEM STRUCTURAL RIVETS	3/16	C6-734A-20 [2]	-	-	-	C6
	1/4	C8-734A-20 [2,4]	-	-	-	C8
PROTRUDING HEAD MAGNA-LOK®, MAGNA-BULB® & HEMLOK® & SERRATED STEM STRUCTURAL RIVETS	3/16	PH6-734A-20 [2,4]	-	-	-	PH6
	1/4	PH8-734A-20 [2,4]	-	-	-	PH8

AVEX®, KLAMP-TITE®, TLR®, HEMLOK® AND MONOBOLT® ARE REGISTERED TRADEMARKS OF AVDEL UK LIMITED. TRIVET® IS A REGISTERED TRADEMARK OF CHERRY AEROSPACE FASTENERS. BULB-TITE® IS A REGISTERED TRADEMARK OF GESIPA FASTENERS USA, INC. MAGNA-TITE® AND MAGNA-LOK® ARE REGISTERED TRADEMARKS OF ARCONIC INC. POP® IS A REGISTERED TRADEMARK OF EMHART TEKNOLOGIES.

1) YOU CAN CHANGE THE 743-24 NOSE ASSEMBLY (INCLUDED WITH TOOL) TO INSTALL OTHER FASTENERS BY PURCHASING NOSE TIP SHOWN AND USING APPROPRIATE FOLLOWER SHOWN.

2) NOSE ASSEMBLIES WITH A 703-18 AND 734A-20 DESIGNATION, I.E. 5P-703-18, MUST BE ORDERED AS COMPLETE NOSE ASSEMBLY.

3) MAY REQUIRE MORE THAN (1) PULL. GAGE BILT RECOMMENDS GB734 TOOL.

4) REQUIRES 100 PSI AIR PRESSURE

NOTE: THE LAST 2 DIGITS OF THE NOSE ASSEMBLY REPRESENTS THE LENGTH THE NOSE EXTENDS FROM THE TOOL I.E. -20 = 2.0 INCHES

REV. 12/17

Alternative Styles

(Sold Separately)

Unless ordered fastener specific (I.E. GB743/4N), the GB743 series installation tools are furnished with nose assembly 8N-743-24 and spare nose tip (10204) to convert to 6N-743-24. All other nose tips must be ordered separately. When ordering tool fastener specific, contact Gage Bilt for more information.

"VT" installation tools are not furnished with the nose assemblies above and must be ordered for your specific fastener.

OPTIONS

The GB743 series installation tools may be ordered with a vacuum system. Gage Bilt offers two varieties (see below).

Order GB743 series installation tools fastener specific by adding the appropriate suffix (see selection chart).

HOW TO ORDER GB743 SERIES

GB743 SH V / 8N

TOOL SERIES
SH - SPLIT HANDLE MODEL
SR - SPLIT RIVETER MODEL
NO DESIGNATION - STANDARD MODEL

8N - FASTENER SPECIFIC DESIGNATION (SEE SELECTION CHART)
NO DESIGNATION - STANDARD

V - VACUUM W/ COLLECTOR BOTTLE
VT - VACUUM W/ EVACUATION
NO DESIGNATION - NO VACUUM

Standard SH tools are equipped with 8ft (2.4 m) hydraulic hose assemblies & Standard SR tools are equipped with 3ft (.91 m) hydraulic hose assemblies. For all other hydraulic hose assembly length requirements contact GAGE BILT.

"V" DESIGNATION = PINTAIL COLLECTOR BOTTLE

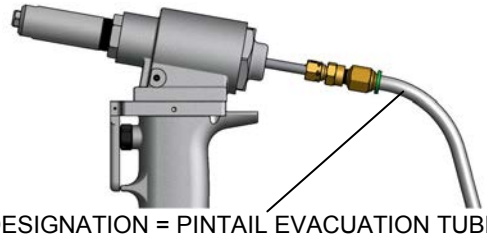

"VT" DESIGNATION = PINTAIL EVACUATION TUBE

(TOOL MUST BE ORDERED FOR YOUR SPECIFIC FASTENER. CONTACT GAGE BILT INC. FOR SPECIFIC APPLICATIONS.)

Inline (SRA)

All SRA and SHA tools require a powerunit to operate. Please contact GAGE BILT for more information.

Pistol Grip (SHA)

Description *Image may not reflect actual tool*		Pistol Grip	Inline
	Pintail Deflector	SHA	SRA
	Vacuum Bottle	SHAV	SRAV
	Vacuum Tube	SHAVT	SRAVT

Tools with hose kits available to 26 ft (7.92 m)

Images may not reflect actual tool

Alternative Styles

(Sold Separately)

GB743SH

Stroke - .900" (22.86 mm)
Hand held weight - 2.25 lbs. (1.02 kg)
Entire tool weight - 7.25 lbs (3.29 kg)
Pull load - 4,000 lbs. (17.79 kN)

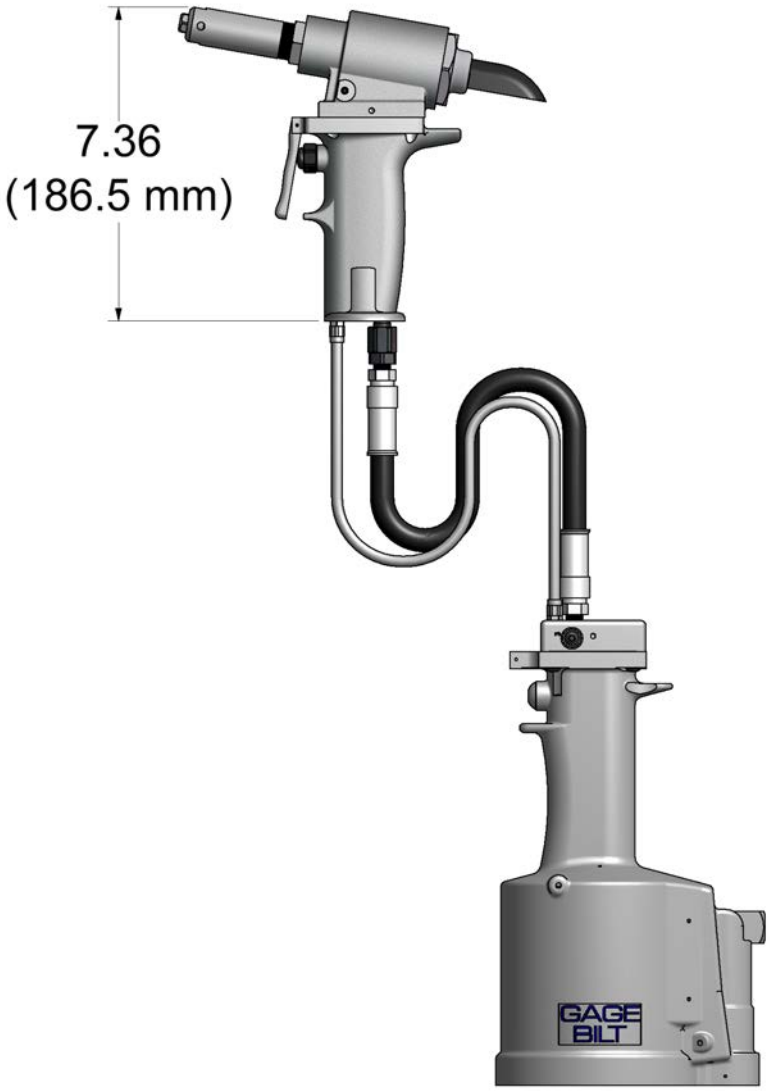

Alternative Styles

(Sold Separately)

GB743SR

Stroke - .900" (22.86 mm)
Hand held weight - 1.75 lbs. (.79 kg)
Entire tool weight - 6.75 lbs (3.06 kg)
Pull load - 4,000 lbs. (17.79 kN)

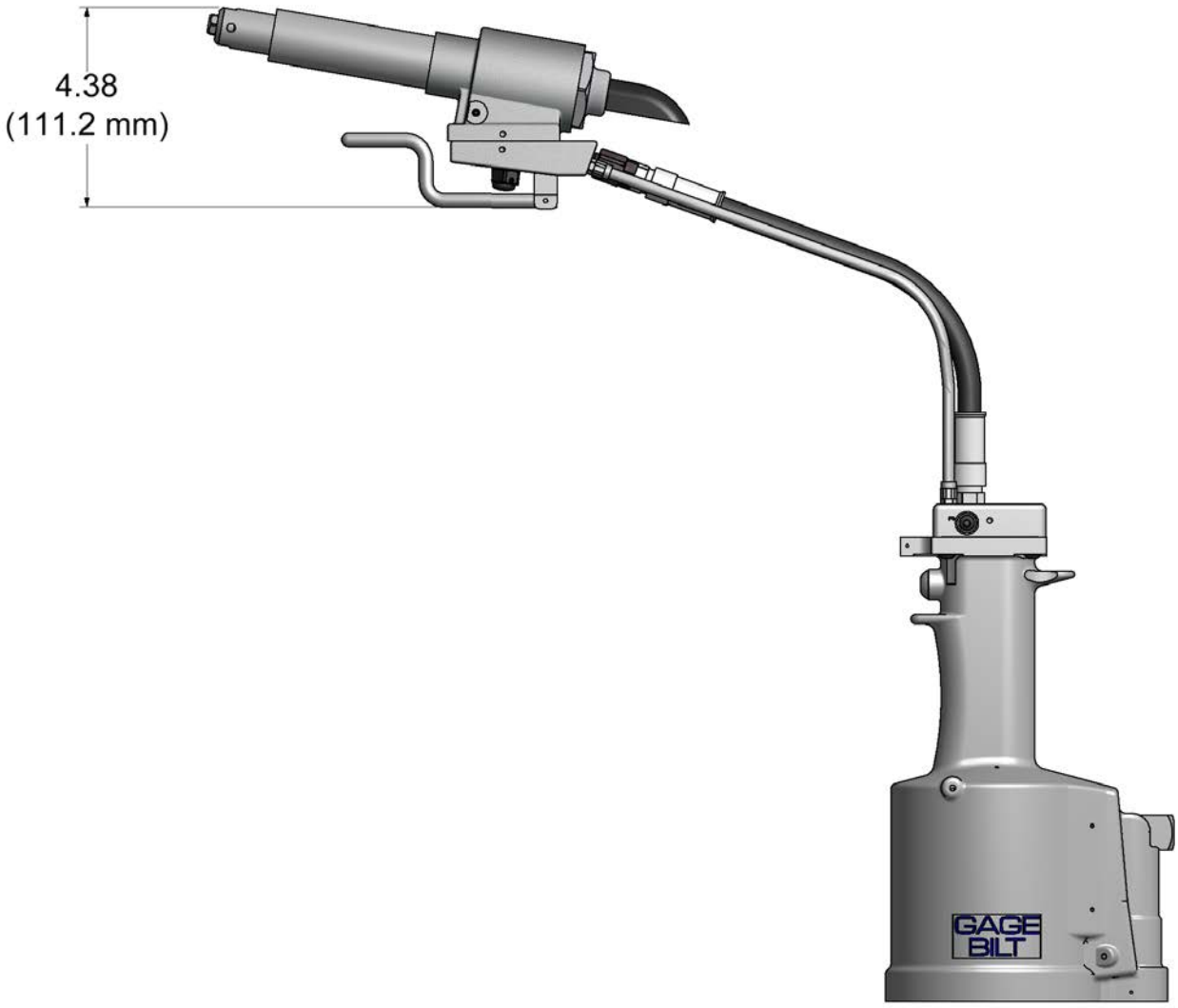

Catcher Bag-Stem

#704214

(Sold Separately)

Air Bleeder Assy

#704153

(Sold Separately)

Extensions

These extensions help reach many restricted areas by increasing the overall length of the nose assembly. They fit directly on the GB743 Installation Tool.

(Sold Separately)

L	Part Number	Equivalent to:
2”	703002	743A50
4”	703004	-
6”	703006	-

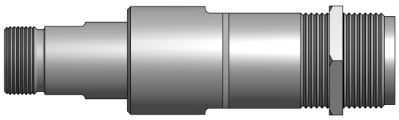

This page intentionally left blank

Riveter Kits Available

(Sold Separately)

Gage Bilt offers a wide selection of standard and custom kits tailored to your needs.
Contact us for more information.

TEFLON® IS REGISTERED TRADEMARK OF E.I. DUPONT DE NEMOURS & CO. LUBRIPLATE® IS A REGISTERED TRADEMARK OF FISKE BROTHERS REFINING CO. LOCTITE® IS A REGISTERED TRADEMARK OF HENKEL CORPORATION. DEXRON® IS A REGISTERED TRADEMARK OF GENERAL MOTORS CORPORATION. SLIC-TITE® IS A REGISTERED TRADEMARK LA-CO INDUSTRIES.